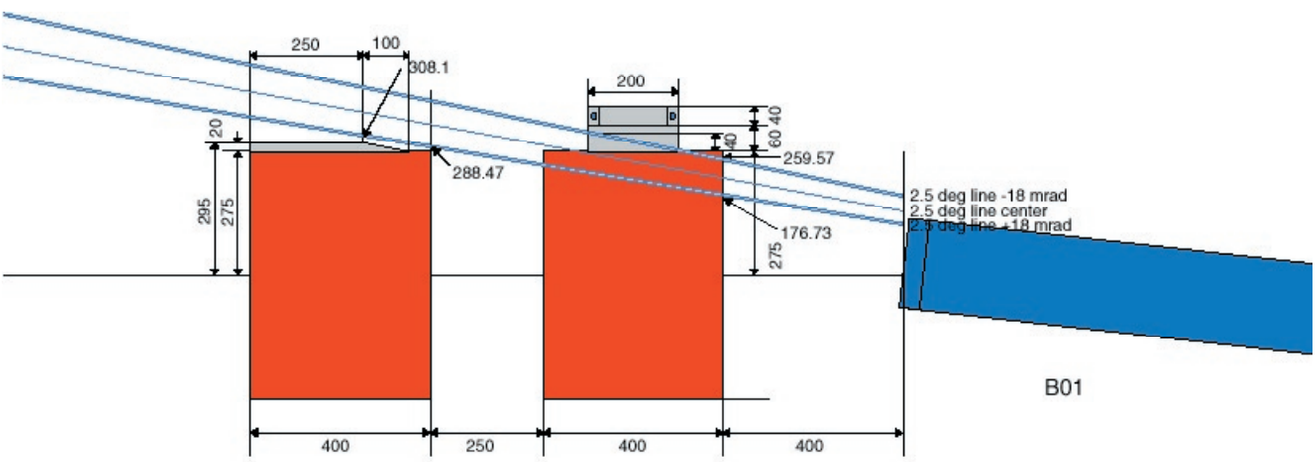
250
100
308.1
200
20
40
60
40
259.57
288.47
295
275
2.5 deg line -18 mrad
2.5 deg line center
2.5 deg line +18 mrad
176.73
275
B01
400
250
400
400

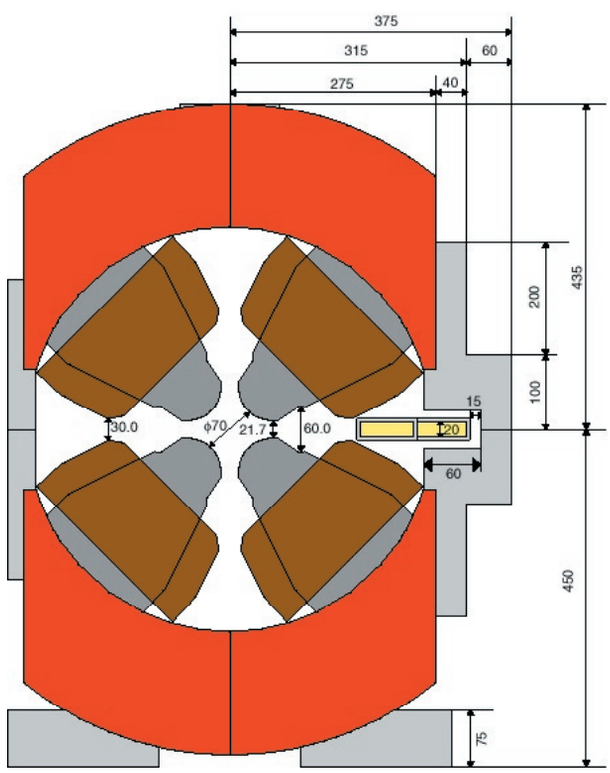
375
315
60
275
40
435
200
100
15
30.0
ϕ70
21.7
60.0
20
60
450
75